DGC-2020 Digital Genset Controller







A highly advanced integrated genset control system, this device provides genset control, transfer switch control, metering, protection, and programmable logic in a simple, easy-to-use, reliable, rugged, and cost effective package.

Features

- Generator metering (includes three-phase mains)
- Engine and generator protection: 27, 32R, 40Q, 59, 81O/U
- Optional enhanced generator protection: 47, 51, 78, and 81ROCOF
- Load sharing and generator sequencing (via LSM-2020 Load Share Module)
- Var sharing over Ethernet (via LSM-2020)
- BESTCOMS*Plus*® Software
  - Programming and setup
  - Intuitive and powerful
  - Remote control and monitoring
  - Programmable logic
  - USB communications
- Automatic transfer switch control
- Automatic synchronizer (optional)
- Exercise timer
- SAE J1939 engine ECU communications
- Automatic generator configuration detection
- Expandable functionality via add-on modules
  - LSM-2020 Load Share Module
  - CEM-2020 Contact Expansion Module
  - AEM-2020 Analog Expansion Module
- Multilingual capability
- Remote communications to Basler's RDP-110 (remote display panel)
- Sixteen programmable contact inputs
- Up to 15 contact outputs: 3 contacts rated for 30 Adc and up to 12 programmable contacts rated for 2 Adc

Visit www.basler.com for additional information and style configuration tool.

Benefits

- Provides integrated engine-genset control, protection, and metering in a single package.
- The Offline Simulator, provided in BESTlogic™*Plus*, helps test and troubleshoot logic without the need for expensive hardware.
- Flexible programmable logic and programmable I/O make it easy to expand the DGC-2020's inputs and outputs with the CEM-2020 (Contact Expansion Module) and the AEM-2020 (Analog Expansion Module). This saves time and money by eliminating unnecessary external PLCs and control relaying.

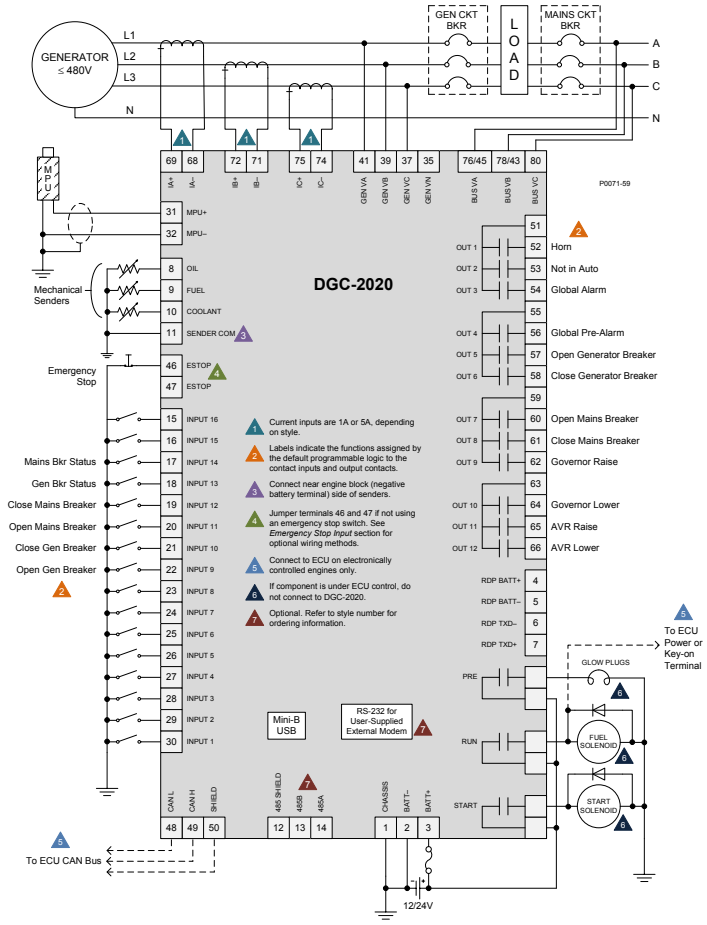

Figure 1 - DGC-2020 Connection Diagram for a Typical Application

Specifications

Power Supply

Nominal:	12 or 24 Vdc
Range:	6 to 32 Vdc
Battery Ride Through:	Starting at 10 Vdc, withstands cranking ride-through down to 0 V for 50 ms

Power Consumption

Sleep Mode:	5 W
Normal Operational Mode:	7.9 W
Maximum:	14.2 W

Current Sensing

1 A Sensing:	0.02 to 1.0 Aac, continuous 2 Aac for 1 second
5 A Sensing:	0.1 to 5.0 Aac, continuous 10 Aac for 1 second
Burden:	1 VA

Voltage Sensing

Range:	12 to 576 Vrms L-L
Frequency Range:	10 to 72 Hz for 50/60 Hz style, 10 to 480 Hz for 400 Hz style
Burden:	1 VA
One-second Rating:	720 Vrms

Contact Sensing

Contact Inputs (16):	Accepts normally open (N.O.), Dry Contacts, programmable
Emergency Stop:	Normally closed (N.C.), Dry Contact

Engine Speed Sensing

Magnetic Pickup:	
Voltage Range:	6 to 70 Vpp
Frequency Range:	32 to 10,000 Hz
Generator Frequency:	
Generator Voltage Range:	12 to 576 Vrms
Via ECU over J1939	

Resistive Senders

Fuel Level Sender:	0 to 250 Ω nominal
Coolant Temp Sender:	10 to 2,750 Ω nominal
Oil Pressure Sender:	0 to 250 Ω nominal

Output Contacts

Fuel Solenoid, Engine Crank, Pre-Start Relays Rating:	30 Adc at 28 Vdc-make, break, and carry
Programmable Relays:	Up to 12
Rating:	2 Adc at 28 Vdc-make, break, and carry

Protection

Generator:	27, 32R, 40Q, 59, 81O/U (standard) 47, 51, 78, 81 ROCOF (optional)
Engine:	Oil pressure, coolant temperature, overcrank, ECU-specific elements, and diagnostic reporting.

Agency Approvals

CSA certified, NFPA compliant, CE compliant, UL recognized (Hazardous Location certification available upon request), GOST-R certified

Communication

USB Port:	USB 2.0, Mini-B jack
RS-485 (optional):	9600 baud, 8 data bits, no parity
RDP-110 (optional):	4,000 ft (1,219 m) max wire length, 20 AWG (0.52 mm²) min wire size
Modem (optional):	DB-9 connector (male)
CAN bus:	250 kb/s communication rate, 1.5 to 3 Vdc differential bus

Environmental

Operating Temp:	-40°C to 70°C (-40°F to 158°F)
Storage Temp:	-40°C to 85°C (-40°F to 185°F)
Humidity:	IEC 68-2-38
Salt Fog:	ASTM B 17-73, IEC 68-2-11
Ingress Protection:	IEC IP54 for front panel
Shock:	15 G in three perpendicular planes
Vibration:	
5 to 29 Hz:	1.5 G peak
29 to 52 Hz:	0.036″ (0.914 mm) double amplitude
52 to 500 Hz:	5 G peak

Physical

Weight:	4.4 lb (2 kg)
Dimensions (WxHxD):	11.77″ x 8.27″ x 2.69″ (299 mm x 210 mm x 69 mm)

For complete specifications, download the instruction manual at www.basler.com.

Style Chart

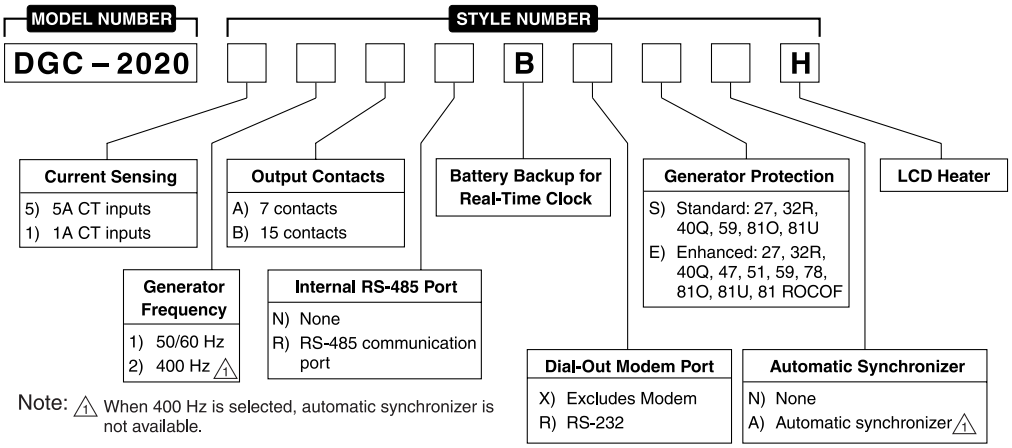

Note: 1 When 400 Hz is selected, automatic synchronizer is not available.

Related Products

- BE1-11*g* Generator Protection System
  - A complete generator protection system.
- DECS-250 Digital Excitation Control System
  - Total control in a compact package provides precise voltage, var and power factor regulation, exceptional system response, and generator protection.

Accessories

- AEM-2020 Analog Expansion Module
  - Easily increases the functionality by seamlessly adding analog inputs and outputs.
- CEM-2020, CEM-2020H Contact Expansion Module
  - Each module adds 10 inputs and up to 24 outputs that are easily programmed through BESTCOMS*Plus*® for easy integration into the system.
- LSM-2020 Load Share Module
  - The simple-to-use LSM-2020 easily adds paralleling capabilities with little effort and expense.
- RDP-110 Remote Display Panel
  - Provides remote alarm and pre-alarm indication and annunciation of system status, easily meeting the annunciation requirements of NFPA-110 applications.

ISO9001-2000
Highland, IL USA Taylor, TX USA
Wasselonne, France Suzhou, China

Basler Electric®
12570 State Route 143, Highland, Illinois 62249-1074 USA
Tel +1 618.654.2341 Fax +1 618.654.2351
email:info@basler.com www.basler.com

P.A.E. Les Pins, 67319 Wasselonne Cedex, FRANCE
Tel +33 3.88.87.1010 Fax +33 3.88.87.0808
e-mail: franceinfo@basler.com

No. 59 Heshun Road Loufeng District (N),
Suzhou Industrial Park, 215122, Suzhou, P.R.China
Tel +86(0)512.8227.2888 Fax +86(0)512.8227.2887
e-mail: chinainfo@basler.com

111 North Bridge Road #15-06 Peninsula Plaza
Singapore 179098
Tel +65 68.44.6445 Fax +65 68.44.8902
e-mail: singaporeinfo@basler.com